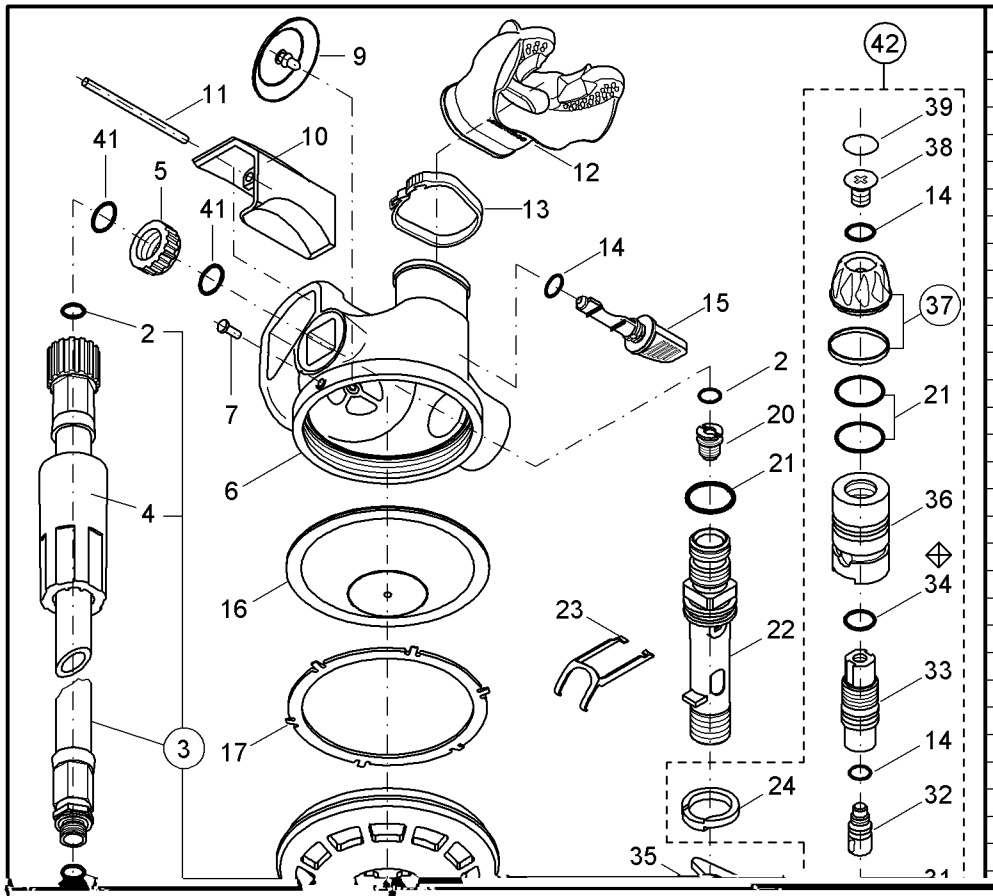

Po.	P/N	DESCRIPTION	DESCRIZIONE	DESCRIPTION	BEZEICHNUNG
1	11029100	PROTECTIVE SLEEVE	TUBO PROTEZIONE	PROTECTEUR TUYAU	Knickschutz
2	01050132	O-RING	O-RING	JOINT TORIQUE	O-Ring
3	01309033	L.P. HOSE cm. 75	TUBO B.P. cm. 75	TUYAU M.P. cm. 75	ND-Schlauch 75 cm.
4	11500040	SLEEVE HOSE	MANICOTTO	MANCHON TUYAU	Schlauchschutz
5	11250106	NUT, JAM	GHIERA SEDE	ECROU MOLETE	Mutter
6	11400025	CASE EU	CASSA EU	BOITIER EU	Gehause EU
7	01075131	PIN, CASE	PERNO CASSA	PIVOT BOITIER	Nagel
8	11300035	PURGE, ANTIENGR.	PULSANTE ANTINC.	PURGE	Luftduschenknopf
9	11250103	EXHAUST VALVE	VALVOLA SCARICO	SOUPAPE D'EXPIR.	Ausblaskappe
10	11300024	COVER EXHAUST	PORTELLO SCAR.	COUVER. DE SOUP.	Ventilkappe
11	11190106	PIN	SPINA	CLAVETTE	Sicherungsstift
12	01040141	MOUTHPIECE	BOCCAGLIO	EMBOUT	Mundstuck
13	01040026	CLIP LIGHT	FASCETTA LIGHT	CLIP LIGHT	Mundstuck Clip Light
14	01050126	O-RING	O-RING	JOINT TORIQUE	O-Ring
15	11300023	FLOW VANE	DEFLETTORE	CORRECT. VENTURI	Regulierschraube
16	11300008	DIAPHRAGM ASSY	MEMBRANA COMPL.	MEMBRANE COMPL.	Membrane Komplett
17	11190117	RING, COVER	ANELLO CALOTTA	ANNEAU COUVERCLE	Ring
18	11250222	COVER EU	CALOTTA EU	COUVERCLE EU	Schutz EU
19	01020110	SPRING	MOLLA	RESSORT	Feder
20	11500109	ORIFICE	ORIFIZIO	ORIFICE	Ventilsitz
21	01050160	O-RING	O-RING	JOINT TORIQUE	O-Ring
22	11600022	HOUSING	SEDE	LOGEMENT	Gehause-welle
23	11250141	LEVER	LEVA	LEVIER	Kipphebel
24	11264003	JOINT	GIUNTO		
25	11250221	SEAT	VALVOLA	CLAPET	Ventil
26	11250220	POPPET	PISTONCINO	POUPEE	Ventiltrager
27	01050363	O-RING	O-RING	JOINT TORIQUE	O-Ring
28	11250015	POPPET ASSY	ASS. PISTONCINO	POUPEE ASSEMBLEE	Ventiltrager Komplett
29	01020216	SPRING	MOLLA	RESSORT	Feder
30	10700105	RING	ANELLO	ANNEAU	Ring

SCUBAPRO