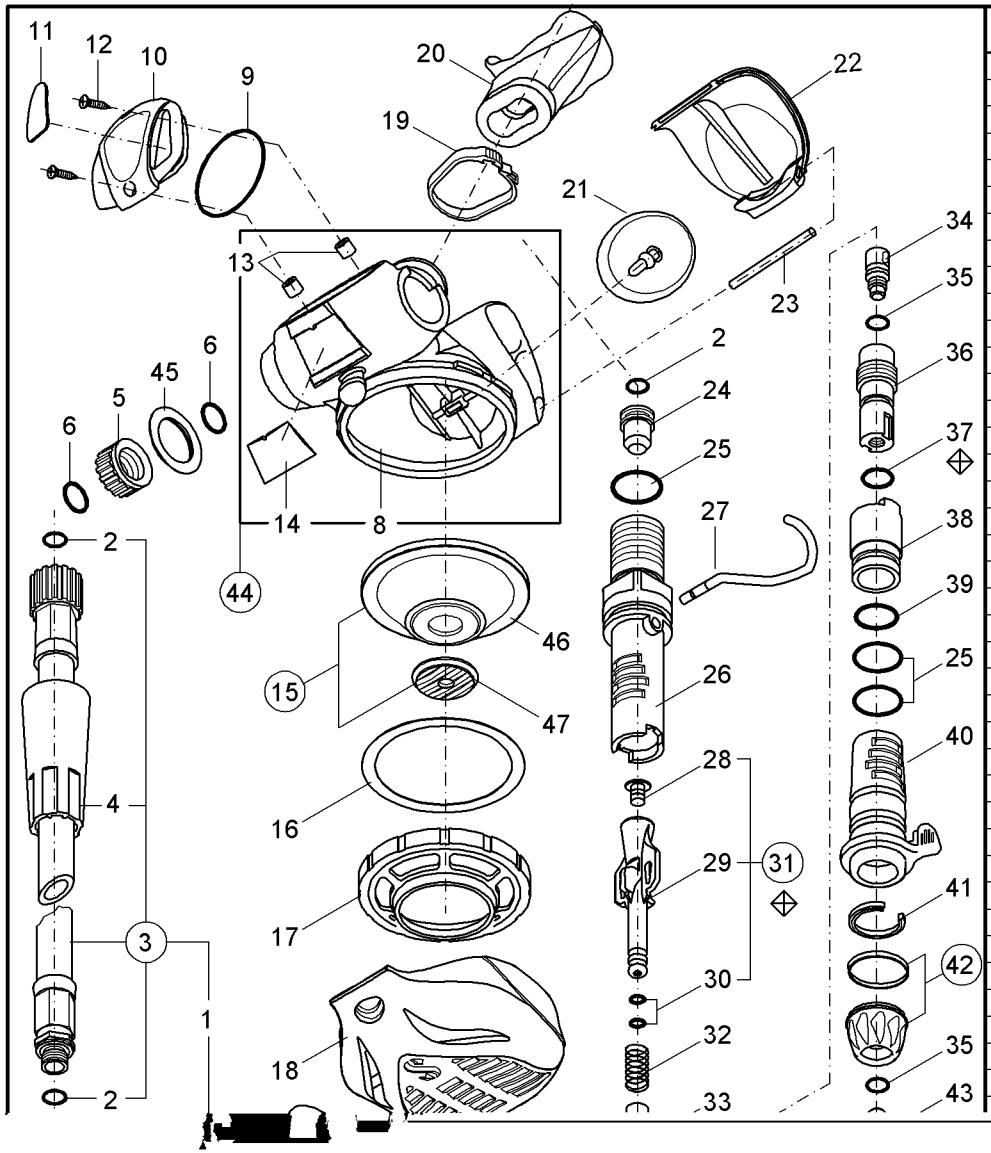


| Po. | P/N | DESCRIPTION | DESCRIZIONE | DESCRIPTION | BEZEICHNUNG |
|---|---|---|---|---|---|
| 1 | 11029100 | PROTECTIVE SLEEVE | TUBO PROTEZIONE | PROTECTEUR TUYAU | Knickschutz |
| 2 | 01050132 | O-RING | O-RING | JOINT TORIQUE | O-Ring |
| 3 | 01309031 | L.P. HOSE cm. 75 | TUBO B.P. cm. 75 | TUYAU M.P. cm. 75 | ND-Schlauch 75 cm. |
| 4 | 11030030 | HOSE SLEEVE | MANICOTTO | MANCHON TUYAU | Schlauchschutz |
| 5 | 11250106 | NUT, JAM UNIF. | GHIERA SEDE UNIF. | ECROU MOLETE | Mutter |
| 6 | 01050347 | O-RING | O-RING | JOINT TORIQUE | O-Ring |
| 7 | 01006554 | DECAL,KNOB | DECAL POMOLO | DECAL MOLETTE | Decal |
| 8 | 11650006 | CASE | CASSA | BOITIER | Gehause |
| 9 | 01050177 | O-RING | O-RING | JOINT TORIQUE | O-Ring |
| 10 | 11650104 | PLUG, CASE | TAPPO | BOUCHON SUP. | Verschlusskappe |
| 11 | 01650002 | DECAL DIVE | DECAL DIVE | DECAL | Signet |
| 12 | 01100650 | SCREW M2 | VITE M2 | VIS | Schraube |
| 13 | 11650103 | INSERT | INSERTO | INSERT | Buchse |
| 14 | 01650001 | DECAL X650 | DECAL X650 | DECAL | Signet |
| 15 | 11650008 | DIAPHRAGM | MEMBRANA | MEMBRANE | Membrane |
| 16 | 11600050 | RING | ANELLO | RONDELLE | Scheibe |
| 17 | 11650037 | COVER | GHIERA | BAGUE DE SERRAGE | Haltering |
| 18 | 11650036 | PURGE COVER | CALOTTA | COUVERCLE | Schutz |
| 19 | 01040026 | CLIP | FASCETTA | CLIP DE FIXATION | Mundstuck Clip |
| 20 | 01040141 | MOUTHPIECE | BOCCAGLIO | EMBOUT | Mundstuck |
| 21 | 11650109 | EXHAUST VALVE | VALVOLA SCARICO | SOUPAPE D'EXPIR. | Ausblaskappe |
| 22 | 11650007 | COVER EXHAUST | PORTELLO SCAR. | COUVER. DE SOUP. | Ventilkappe |
| 23 | 11190106 | PIN | SPINA | CLAVETTE | Sicherungsstift |
| 24 | 11500109 | ORIFICE | ORIFIZIO | ORIFICE | Ventilsitz |
| 25 | 01050160 | O-RING | O-RING | JOINT TORIQUE | O-Ring |
| 26 | 11650022 | HOUSING | SEDE | LOGEMENT | Gehause-welle |
| 27 | 11650141 | LEVER | LEVA | LEVIER | Kipphebel |
| 28 | 11250221 | SEAT | VALVOLA | CLAPET | Ventil |
| 29 | 11650220 | POPPET | PISTONCINO | POUPEE | Ventiltrager |
| 30 | 01050363 | O-RING | O-RING | JOINT TORIQUE | O-Ring |
| 31 | 11650015 | POPPET ASSY | ASS. PISTONCINO | POUPEE ASSEMBLEE | Ventiltrager Komplett |
| 32 | 01020216 | SPRING | MOLLA | RESSORT | Feder |
| 33 | 11150102 | BALANCE CHAMBER | CAMERA BILANC. | CHAMBRE COMP. | Balance-Kammer |
| 34 | 11600011 | SCREW ADJ. | VITE REGOLAZ. | VIS REGL. | Einstellschraube |
| 35 | 01050126 | O-RING | O-RING | JOINT TORIQUE | O-Ring |
| 36 | 11650102 | STEM, KNOB | ALBERINO | AXE REGLAGE | Welle |
| 37 | 01050293 | O-RING | O-RING | JOINT TORIQUE | O-Ring |
| 38 | 11650105 | SLEEVE | GIUNTO | MANCHON | Gehäuse |
| 39 | 01050351 | O-RING | O-RING | JOINT TORIQUE | O-Ring |
| 40 | 11650107 | DIVE SWITCH | DEVIATORE DI FLUSSO | SELECTEUR | Venturigehäuse |

SCUBAPRO