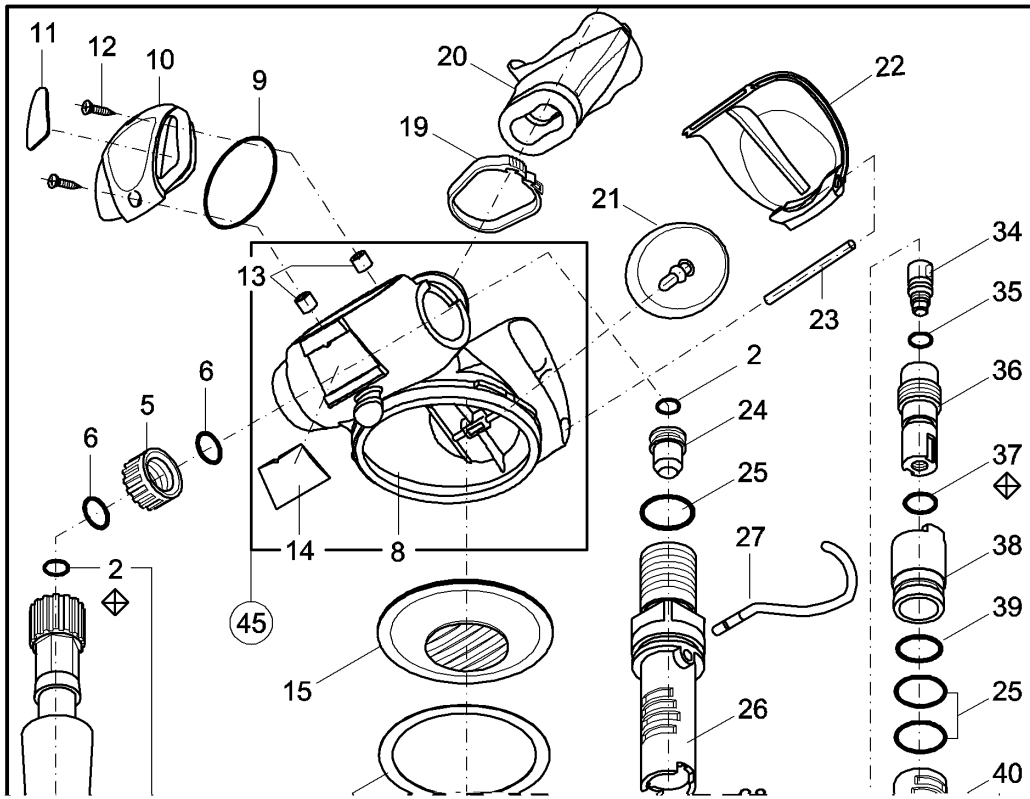

Po.	P/N	DESCRIPTION	DESCRIZIONE	DESCRIPTION	BEZEICHNUNG
1	11029100	PROTECTIVE SLEEVE	TUBO PROTEZIONE	PROTECTEUR TUYAU	Knickschutz
2	01050132	O-RING	O-RING	JOINT TORIQUE	O-Ring
3	01309032	L.P. HOSE cm. 75	TUBO B.P. cm. 75	TUYAU M.P. cm. 75	ND-Schlauch 75 cm.
4	11500040	HOSE SLEEVE	MANICOTTO	MANCHON TUYAU	Schlauchschutz
5	11755120	NUT, JAM UNIF.	GHIERA SEDE UNIF.	ECROU MOLETE	Mutter
6	01050347	O-RING	O-RING	JOINT TORIQUE	O-Ring
7	11610012	TIT. RING	ANELLO TITANIO	ANNEAU TIT.	Tit. Ring
8	11650006	CASE	CASSA	BOITIER	Gehause
9	01050177	O-RING	O-RING	JOINT TORIQUE	O-Ring
10	11650104	PLUG, CASE	TAPPO	BOUCHON SUP.	Verschlusskappe
11	01650002	DECAL DIVE	DECAL DIVE	DECAL	Signet
12	01100650	SCREW M2	VITE M2	VIS	Schraube
13	11650103	INSERT	INSERTO	INSERT	Buchse
14	01651001	DECAL X650 T.	DECAL X650 T.	DECAL	Signet
15	11650005	DIAPHRAGM ASSY	MEMBRANA COMPL.	MEMBRANE COMPL.	Membrane Komplett
16	11600050	RING	ANELLO	RONDELLE	Scheibe
17	11650037	COVER	GHIERA	BAGUE DE SERRAGE	Haltering
18	11650036	PURGE COVER	CALOTTA	COUVERCLE	Schutz
19	01040027	CLIP	FASCETTA	CLIP DE FIXATION	Mundstuck Clip
20	01040141	MOUTHPIECE	BOCCAGLIO	EMBOUT	Mundstuck
21	11650109	EXHAUST VALVE	VALVOLA SCARICO	SOUPAPE D'EXPIR.	Ausblaskappe
22	11650007	COVER EXHAUST	PORTELLO SCAR.	COUVER. DE SOUP.	Ventilkappe
23	11651106	PIN T.	SPINA T.	CLAVETTE T.	Sicherungsstift T.
24	11500109	ORIFICE	ORIFIZIO	ORIFICE	Ventilsitz
25	01050160	O-RING	O-RING	JOINT TORIQUE	O-Ring

SCUBAPRO