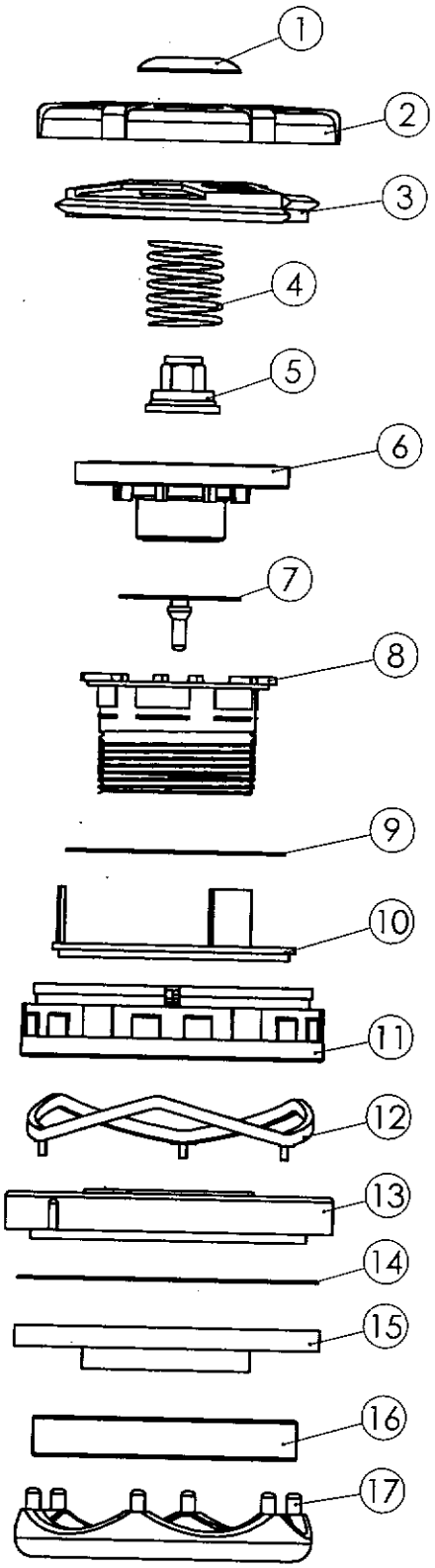

ITEM	QTY.	PART	DESCRIPTION	MATERIAL
1	1	label	See order	Polyester
2	1	s11001	Lid Si tech	Polyblend
3	1	s11022	Adjustment lid	Polyblend
4	1	s10002	Control spring	Stainless s.
5	1	s11323	Center guide	Polyblend
6	1	s11010	Piston	Polyblend
7	1	s11031	Check valve	NR
8	1	s11030	Guide sleeve	Polyblend
9	1	s10005	Membrane	Silicone rubber
10	1	s11322	Retainer	Polyblend
11	1	s11324	Adjustment ring	Polyblend
12	1	s11111	Spring index	Polyblend
13	1	s11371	Protecting ring l.	Polyblend
14	1	s11016	Washer	PA6
15	1	s24517	Attachment nut	Polyblend
16	1	s11015	Filter	Polyether foam
17	1	s11027	Filter lid	Polyblend

				Anm.	
Det-nr.	Benämning		Material	Dimension	Ersätter / Ersatt av
Konst. SI	Ritad DB	Stand.	Godk.	Skala 1:1.5	
SI TECH Special Diving products and Innovation Technology AB LYSEKIL Sweden	Exhust v. Low prof. High flow, Large g.r. Low lid, Ratchet			Rel-model.	Dat. 001125
				Ritn-nr.	S11330S